GrowPros SOLUTIONS

LED LIGHTING SOLUTION FOR COMMERCIAL, INDOOR, AND GREENHOUSE APPLICATIONS

UCL STORAGE RACK

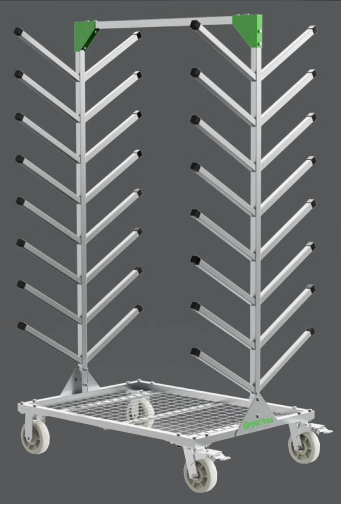

UCL-STORAGE RACK

The Under Canopy LED Light Storage Rack System is a durable and efficient storage solution designed for commercial cultivation facilities. Built with a heavy-duty steel frame, it can securely hold up to 90+ Under Canopy fixtures, keeping them organized and protected when not in use. The rack features both swivel and fixed wheels for easy mobility and stable positioning, while its grated base provides additional storage space for accessories or components.

FEATURES & BENEFITS

- Heavy-duty steel frame built for commercial cultivation environments
- 16 pairs of arms to hold up 90+ Under Canopy Lights.
- Swivel and fixed wheels for smooth mobility and stable positioning
- Grated base provides extra storage space for accessories or components
- Maximizes space efficiency while protecting valuable lighting equipment
- Ideal for organized, professional grow operations

Stainless Steel Tube
1.5″ thick steel tube for a heavy duty frame.

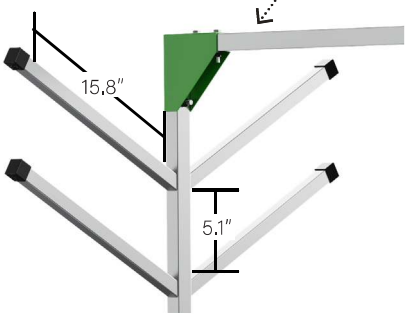

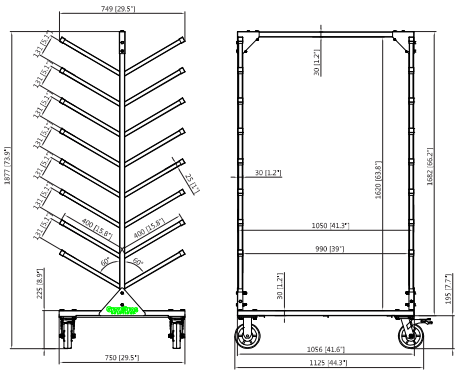

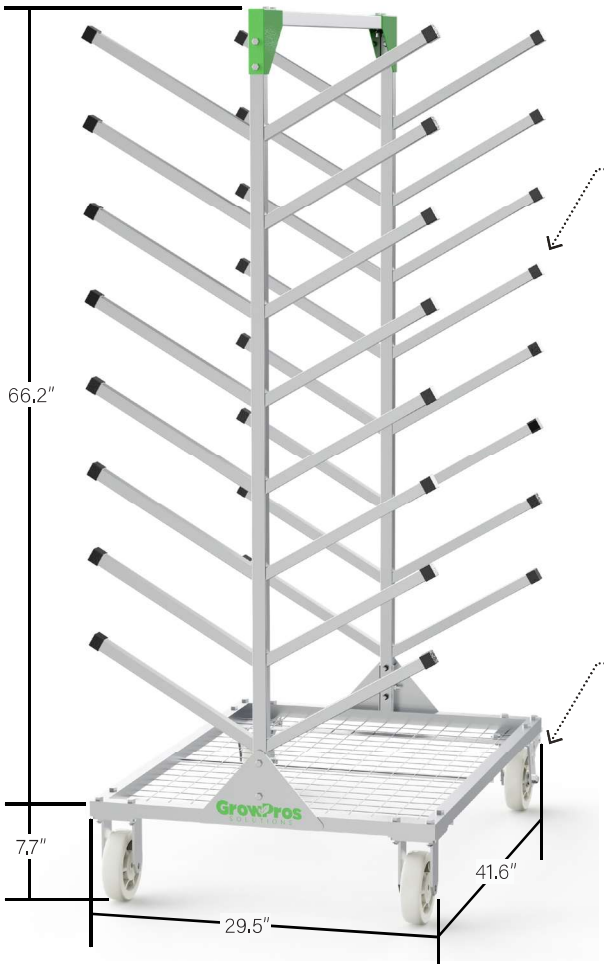

16x Rack Arms
Able to hold up to 90+ Under Canopy Lights.

Swivel Wheels
Swivel and fixed wheels for smooth mobility and stable positioning.

WWW.WEGROWPROS.COM

Address: 4833 Lanier Road, Chino, CA 91710

Tel: (626) 900-8986 | **Email:** info@wegrowpros.com